Sidesloper ™ 4" Carrier riser view

U.S. Patent No. 7,685,946

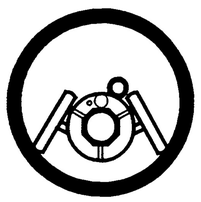

12" SDR 17 Pipe Typical

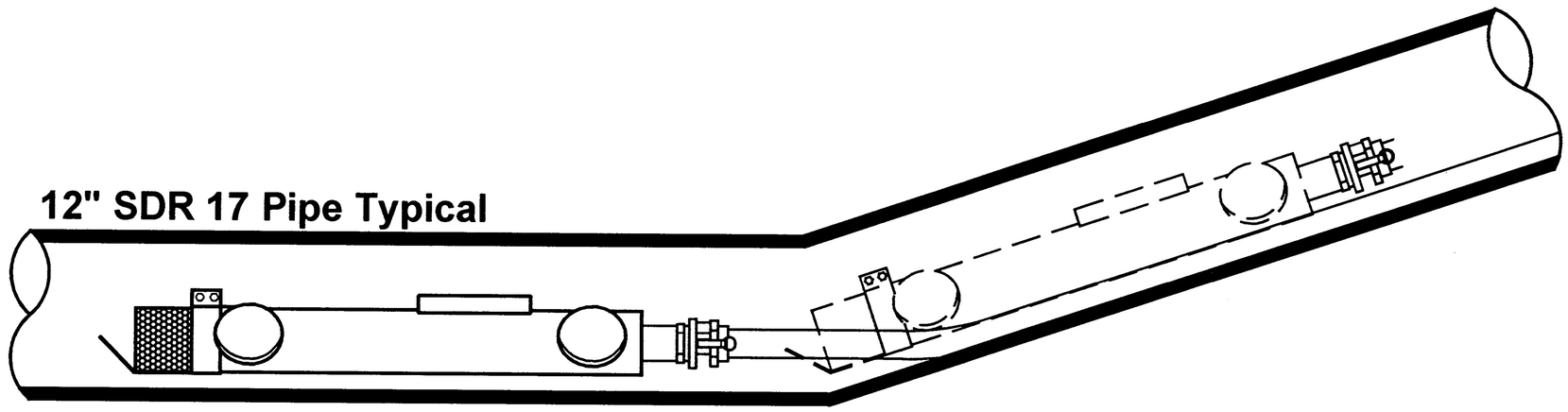

* Wheels modified for 12" pipe
** Consult Manufacturer for use with SDR 11 or 9 pipe

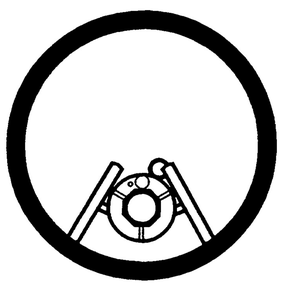

18" SDR 11 Pipe Typical

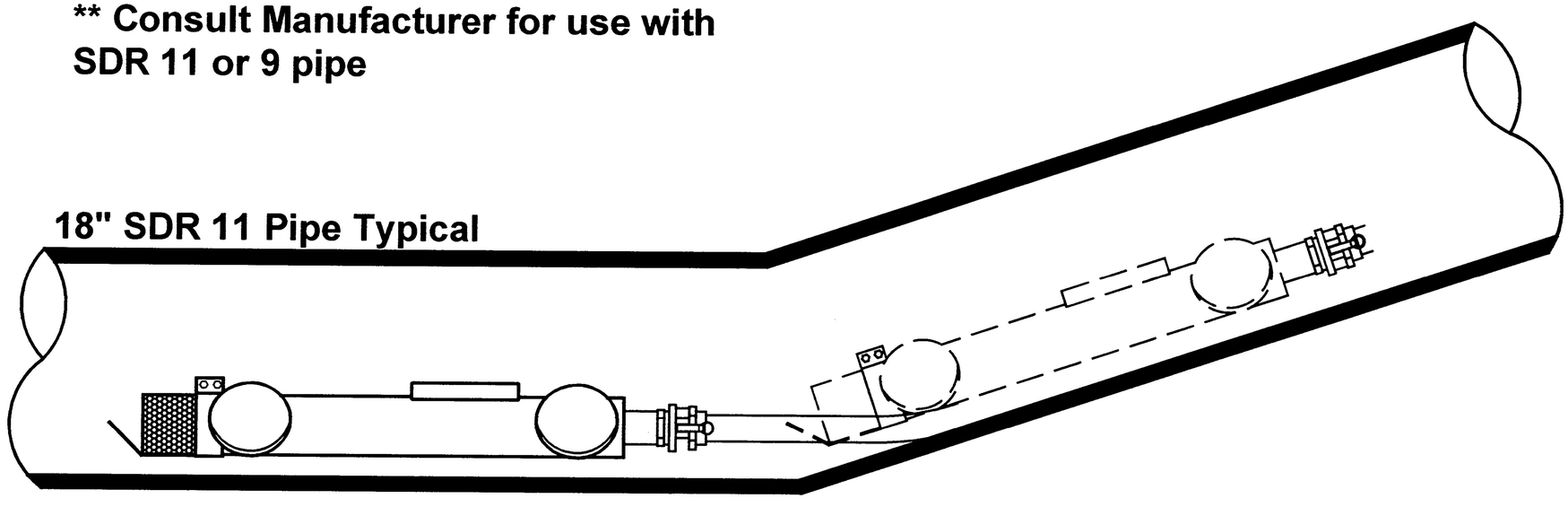

* Preferred application

GunnCo

Pump & Control, Inc.
515 Industrial Way Cumming, GA 30040
(770) 889-7114 info@gunnco.com

Sidesloper **™ Pumps**